2014

dti

optimizing air flow...

DESIGN GUIDE

www.difusiontextil.com

Index

1 Gather space's basic information.

2 Define fabric duct trajectory.

3 Section design.
Shape selection
fabric duct diameter

4 Pressure drop calculation.

5 Materials.

6 Suspension system selection.

7 fabric duct system graphical representation.

Gather space's basic information.

1

In order to design a fabric duct system it's required the next information:

- Space dimension (L,H,A)
- Height where the duct will be placed (Hd)
- Injection temperature. (Ti)
- Space temperature. (T)
- System total pressure. (P)
- System air flow. (Q)

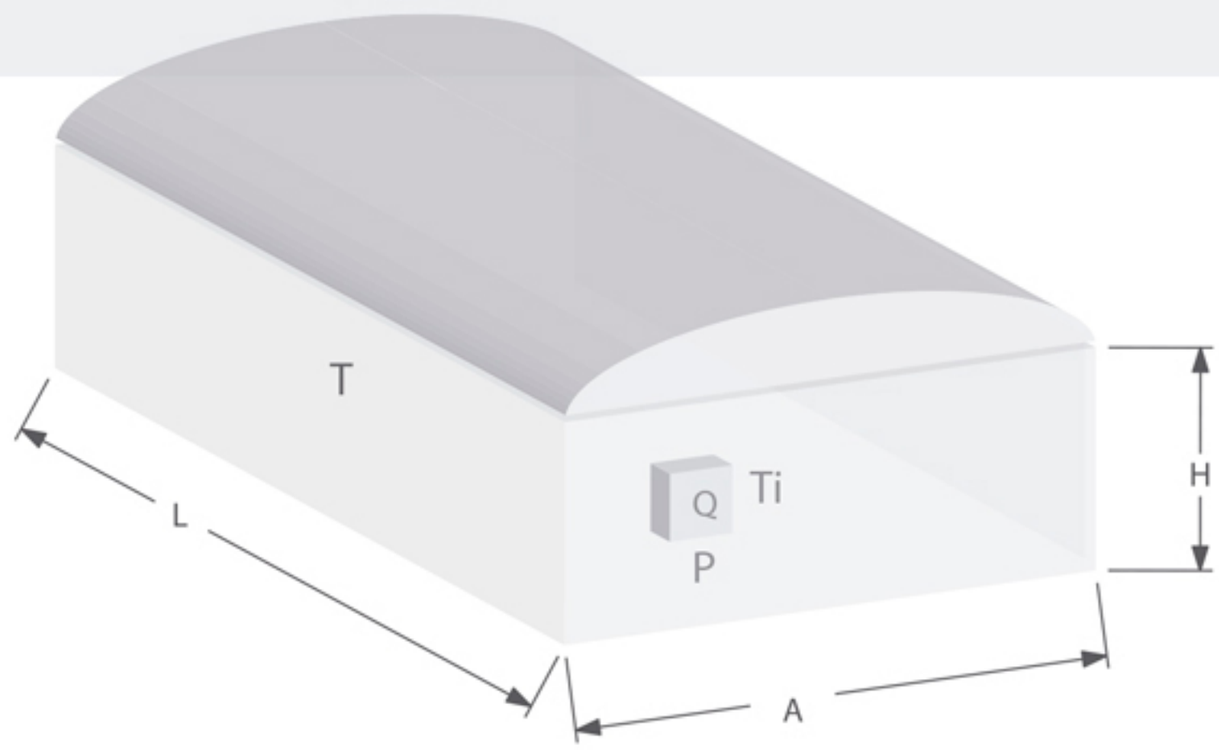

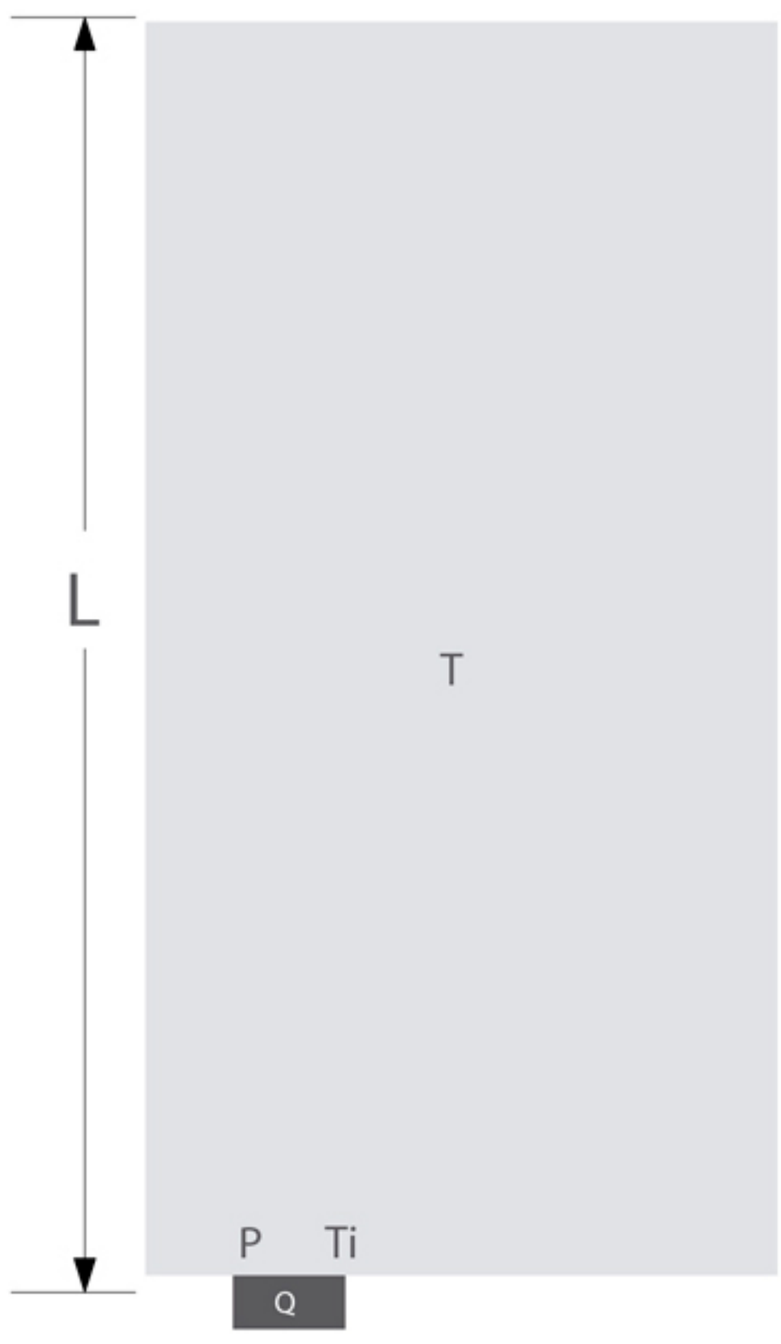

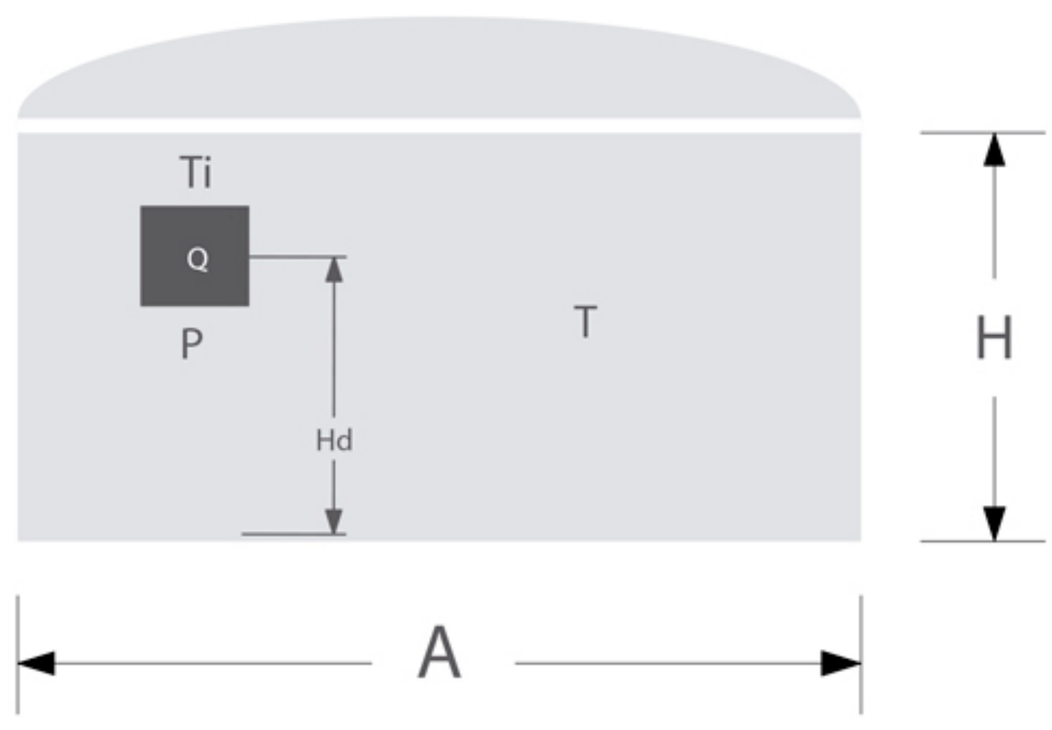

Define fabric duct trajectory.

2

a) System as opposed to conventional systems, diffuses and at the same time conducts air. The main goal of the trajectory design is to accomplish a homogeneous air distribution. There are a lot of solutions for the same scenario, nevertheless it's recommended to use straight paths or trajectories, to reach an optimal system.

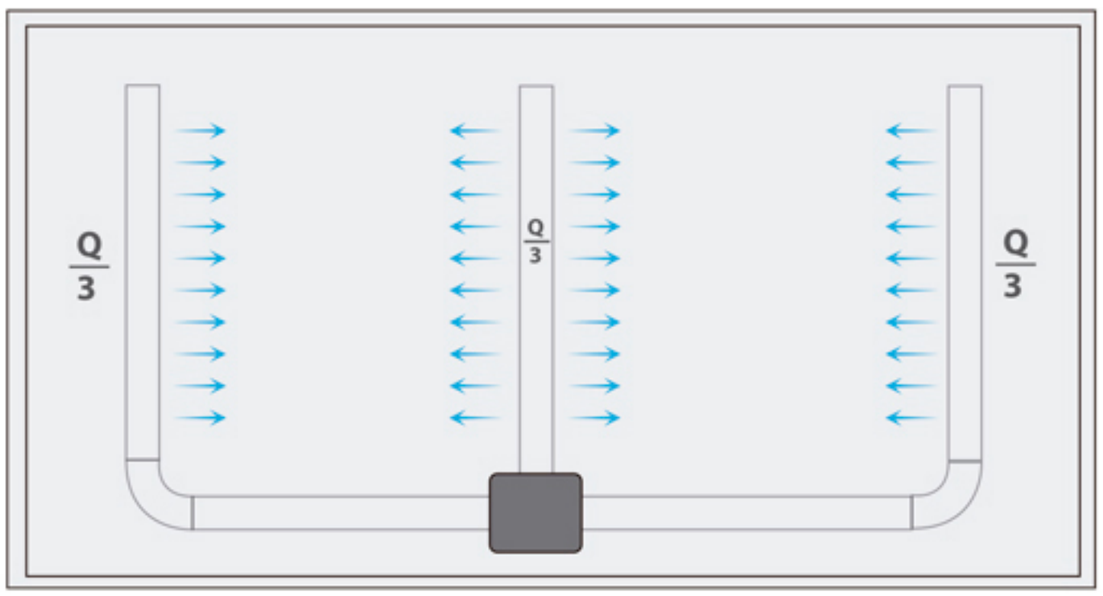

Homogeneous diffusion system

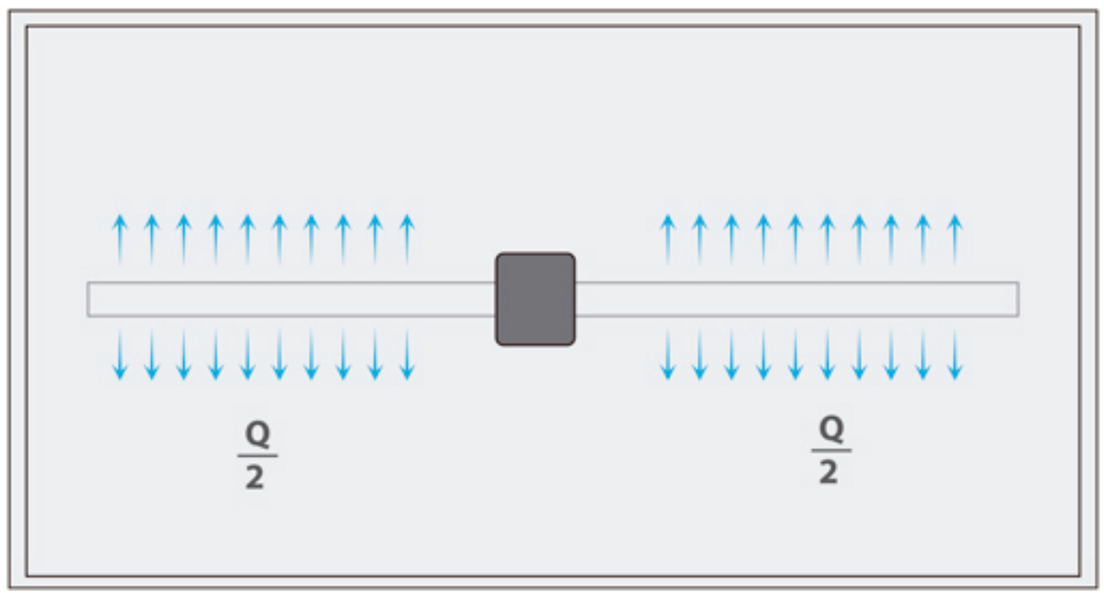

Economic System

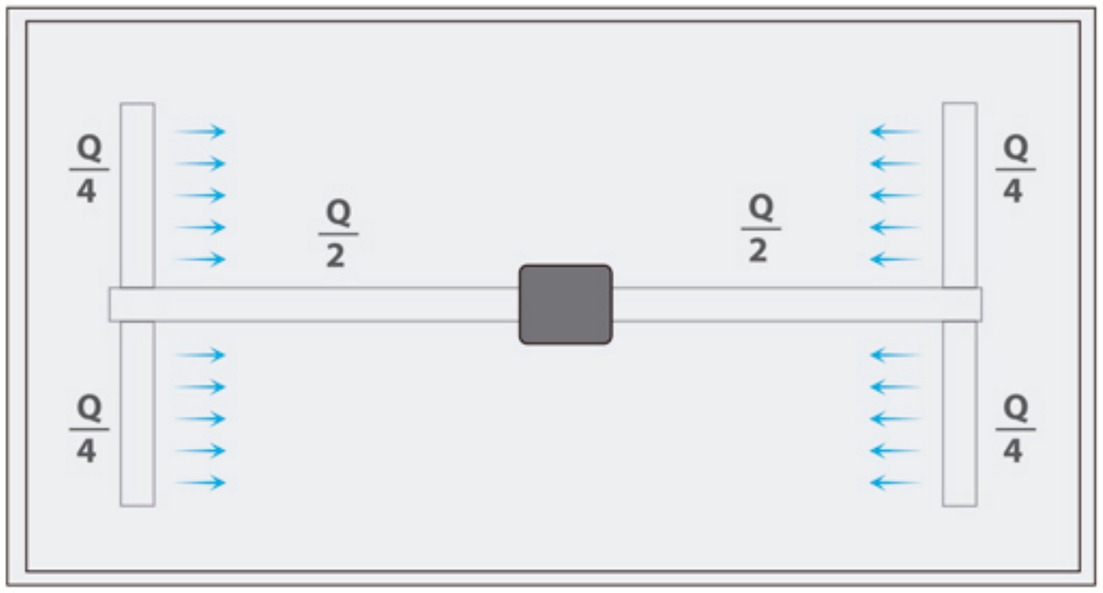

Ends diffusion system

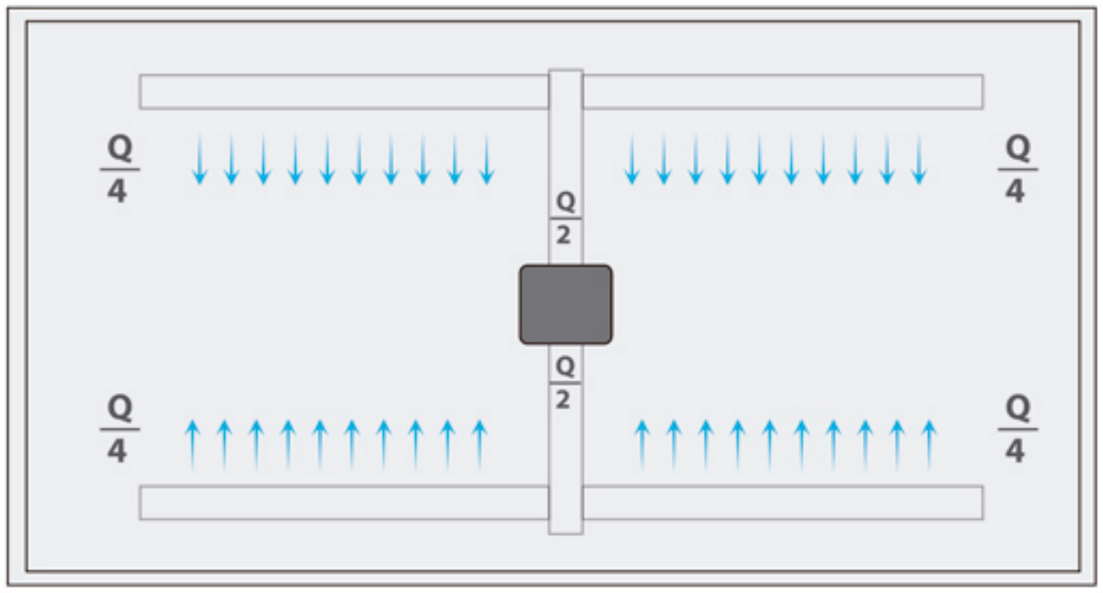

Uniform diffusion system

Define fabric duct trajectory.

2

b) To determine the ideal distance between ducts, it's important to consider the diffusion reach range throughout the next criteria:

Throw

Diameter in mm

Ø	25,4	50,8	63,5	76,2	101,6	127
125	3	5	6	8	10	13
250	4	7	9	11	14	18
375	4	9	11	13	18	22
500	5	10	13	15	20	25
625	6	11	14	17	23	28
750	6	12	15	19	25	31

Diameter in mm

Diameter in mm

Deflexion caused by ΔT

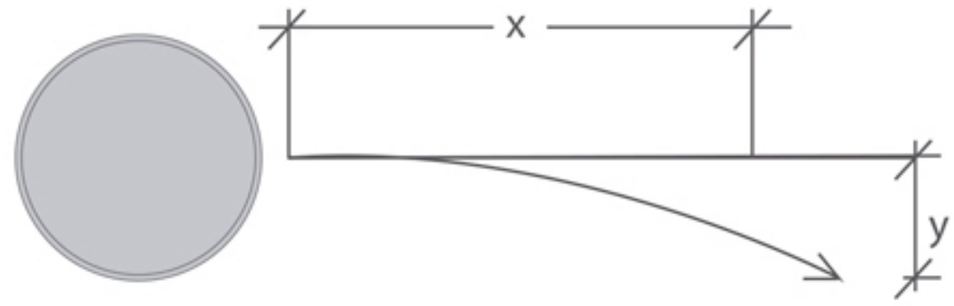

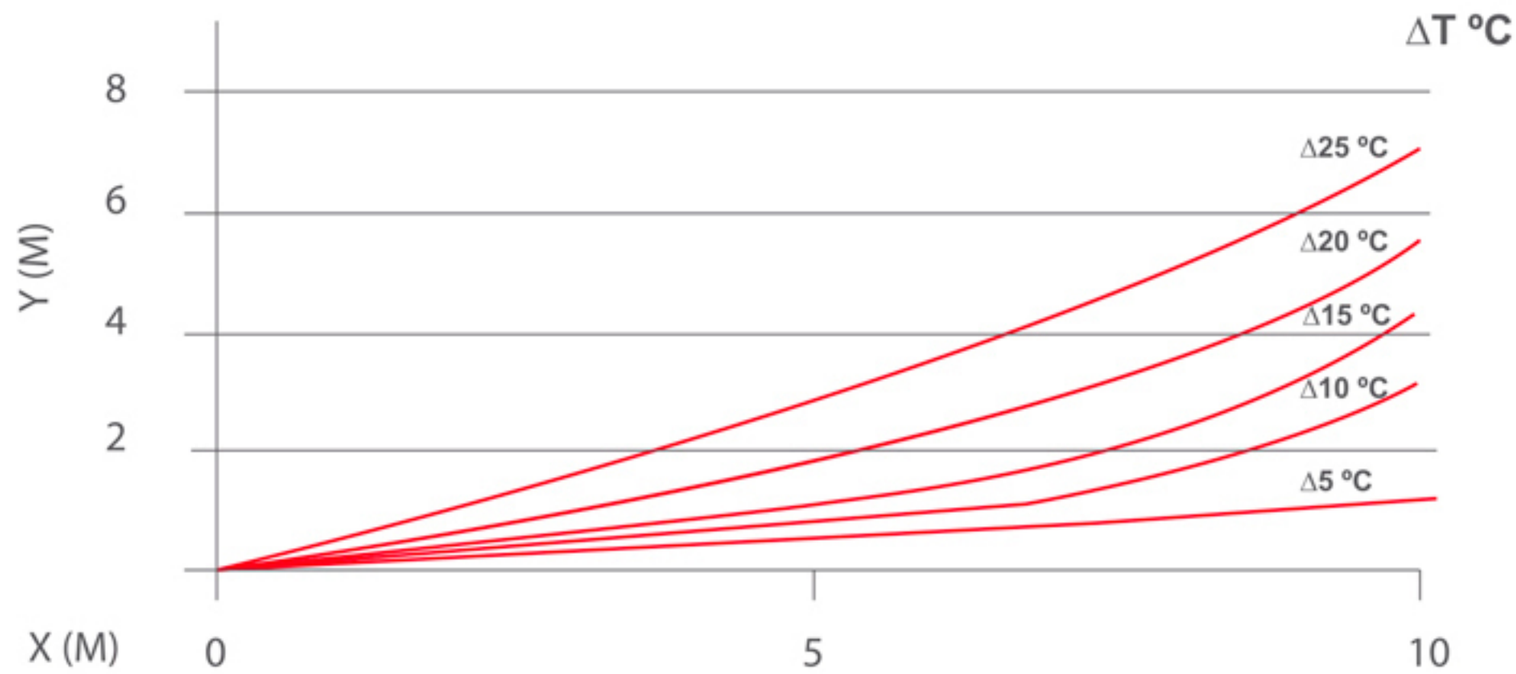

3

Section design
Shape selection

Circular Duct:

The circular shape is the most popular. It could be placed horizontally or vertically and is installed on a cable system or rail. There's no limit regarding it diameter size, which its determine according velocity and air flow inside the duct.

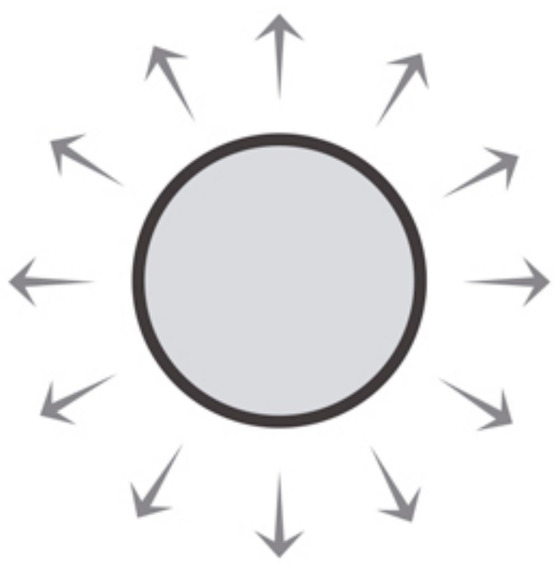

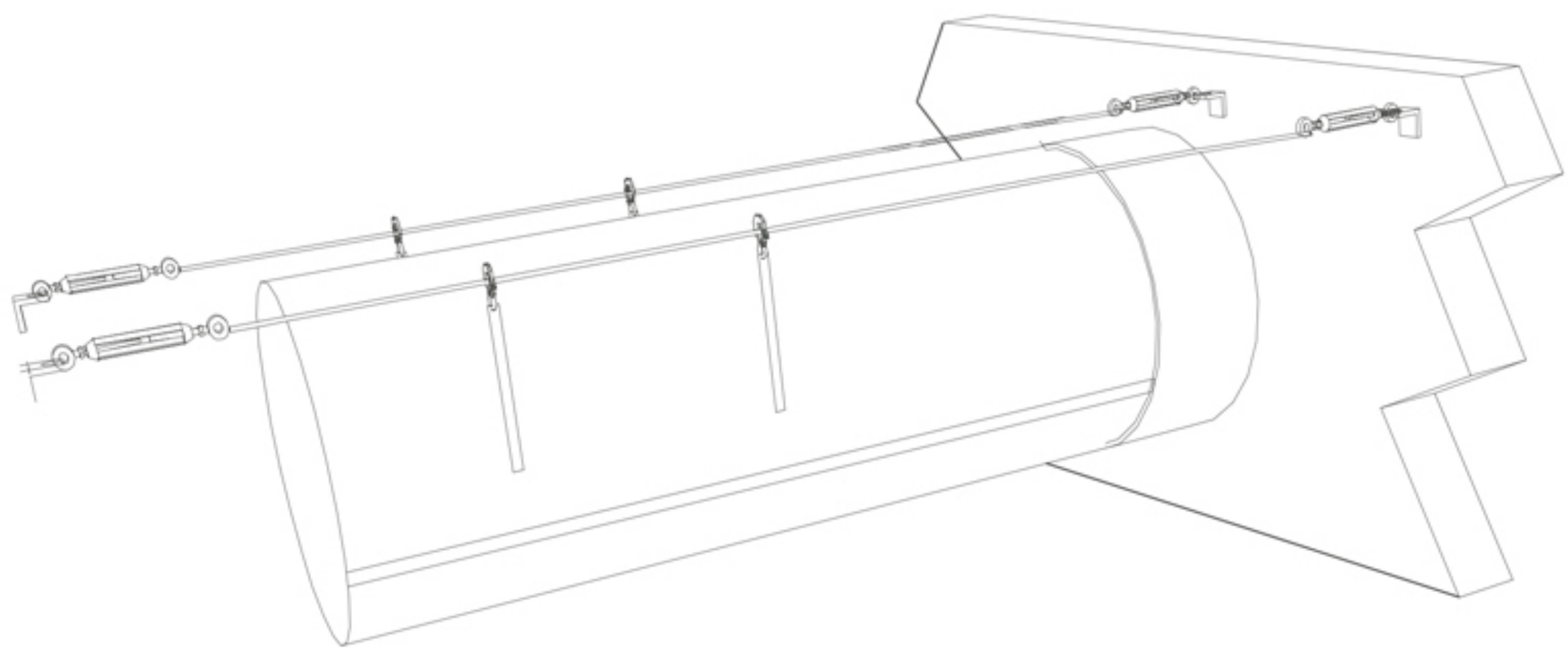

Semicircular Duct:

This model could have different shapes, half round shape and quarter circle shape. It is generally used on flat surfaces. It is placed mainly on a ceiling, a wall or both. This shape fits perfectly in reduced heights scenarios.

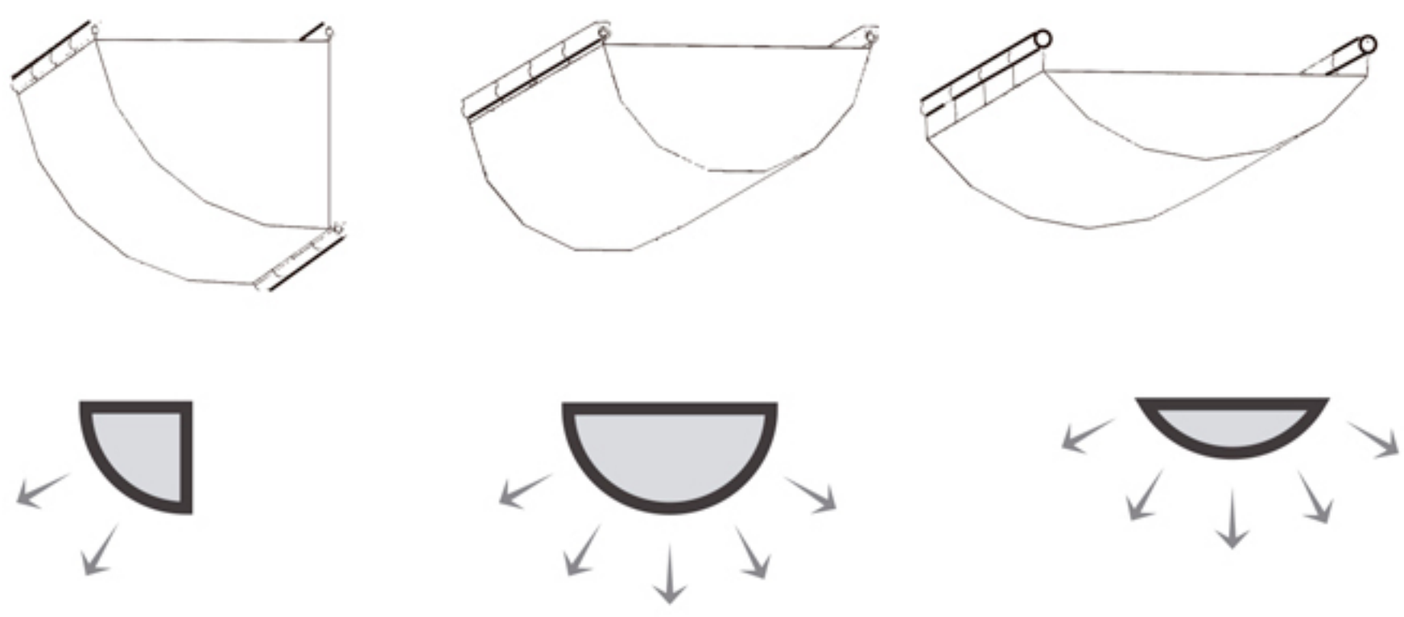

3

Sizing the duct diameter:

The diameter is sized based on air flow and speed conditions. For a circular shape duct speed most reach an 8 m/s to 10 m/s range, as standard. For the semicircular shape duct speed most reach a 5 m/s to 8 m/s range, as standard. If the air injection is parallel or perpendicular to the duct speed most reach a 4 m/s to 5 m/s range.

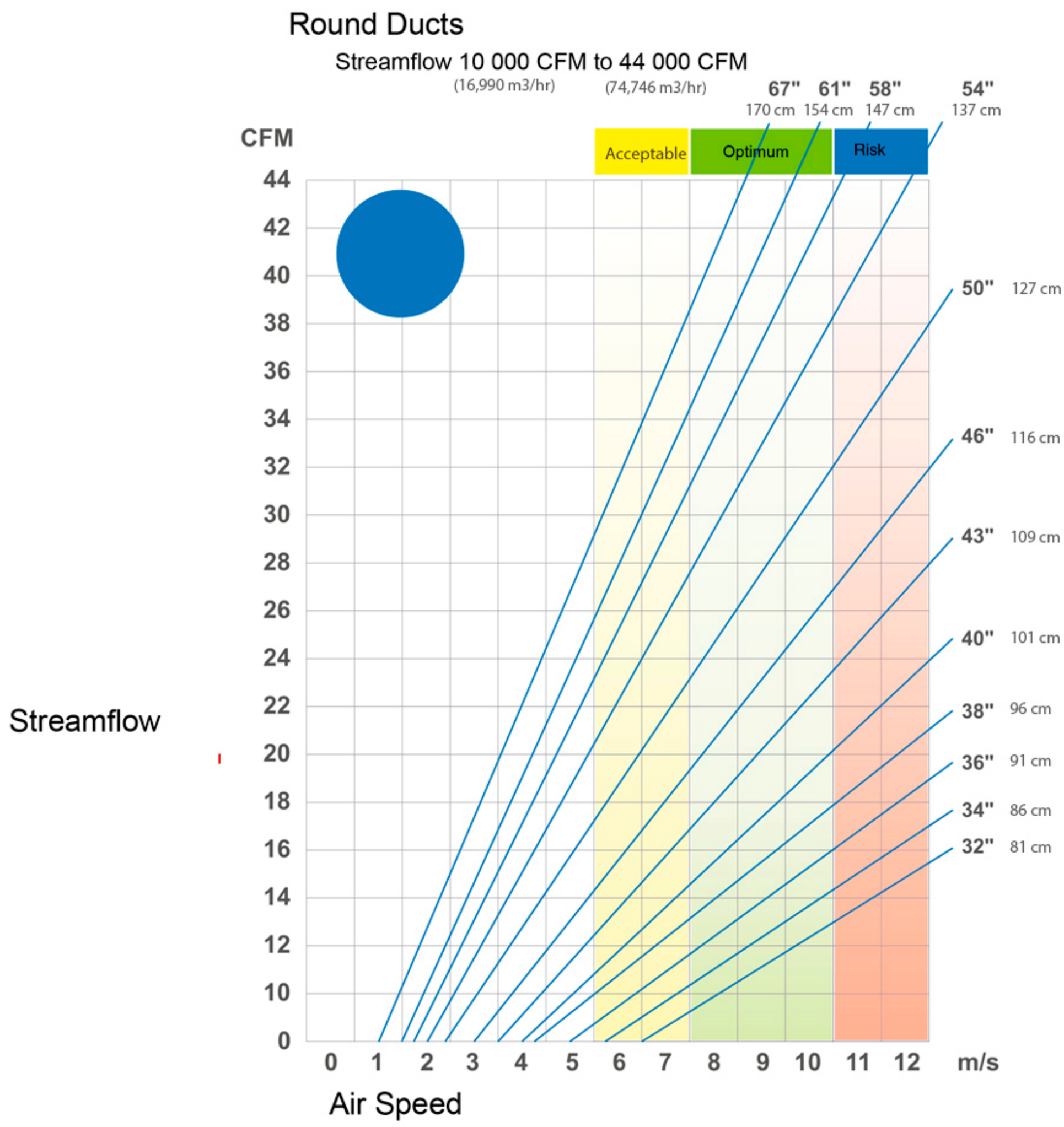

Suspension system selection

3

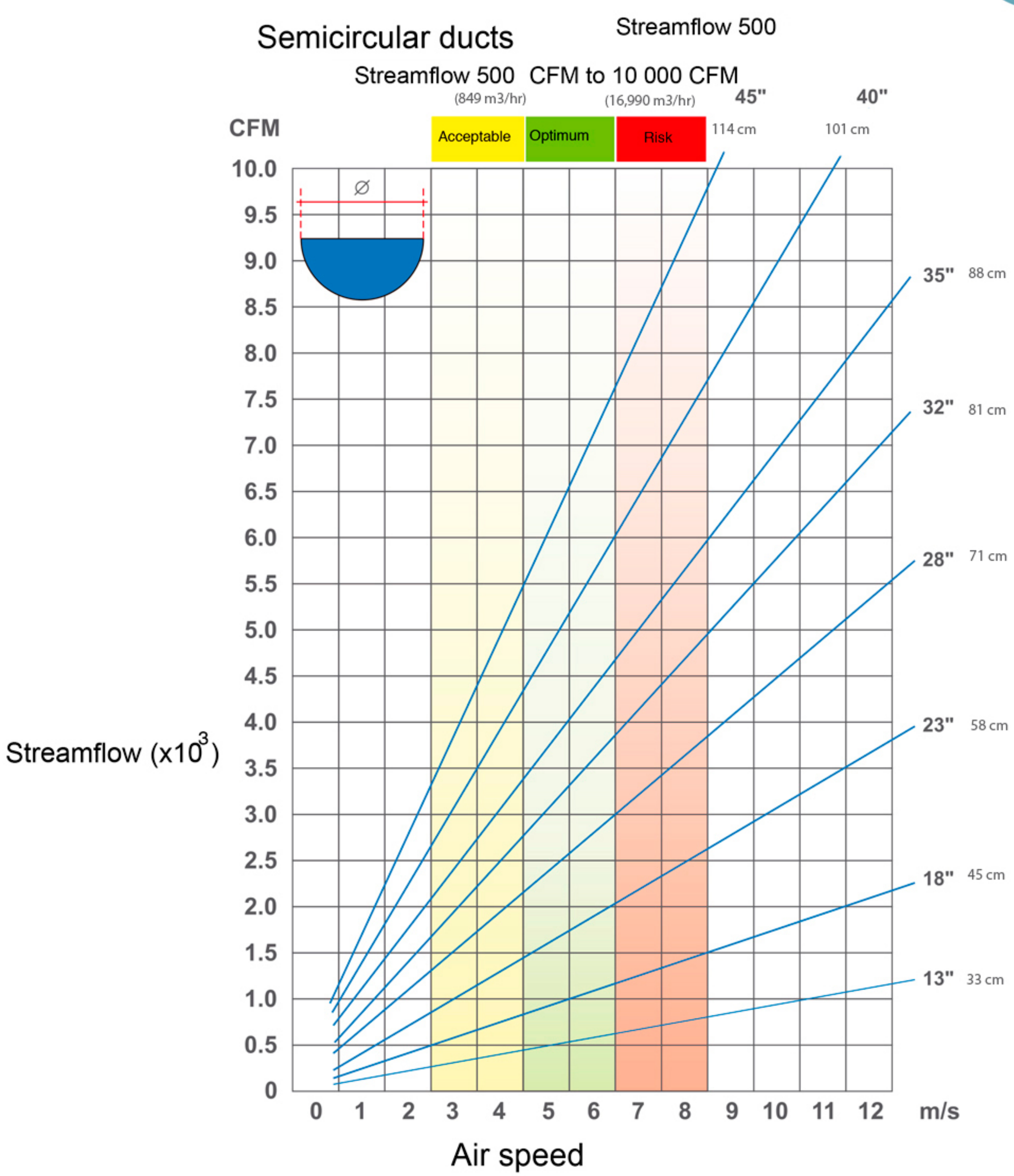

4

Pressure drop calculation.

Straight ducts

$$\triangle P = K \times Kz \times Kw \times \propto \times 21.89\ 10^{-3} \times L \times \frac{Q^{1.82}}{\varnothing^{4.81}}$$

$\propto$ =
L =
Q =
$\varnothing$ =

Elbows and "T's"

$$\triangle p = Co \propto \frac{Vf^{2}}{(4005)}$$

Vf =
Co =
$\propto$ =

Values of $\propto$

Full Color Line = 0.951

Benelux = 0.980

Aeroflex = 0.981

Θ	20°	30°	45°	60°	75°	90°
Co	0.08	0.16	0.34	0.55	0.81	1.2

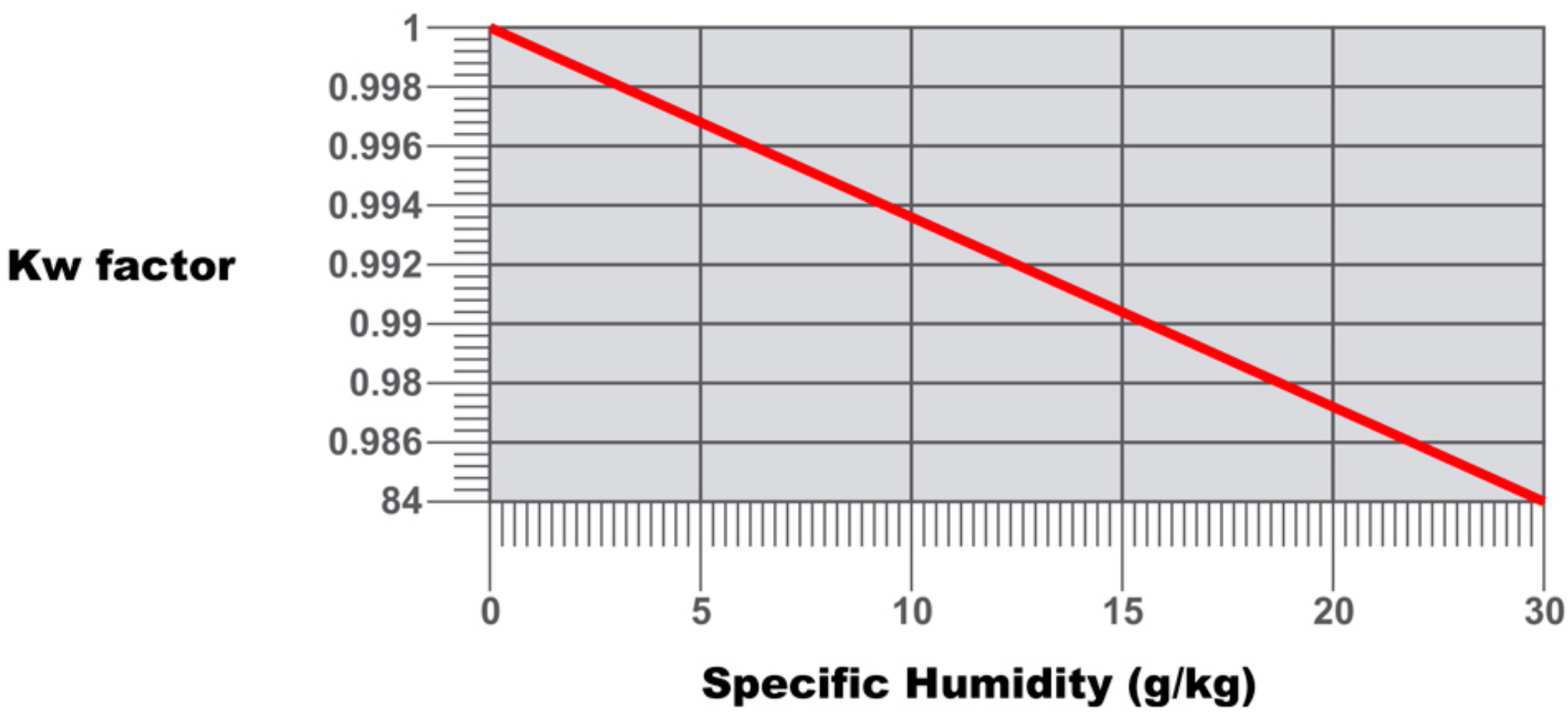

4 Pressure drop calculation.

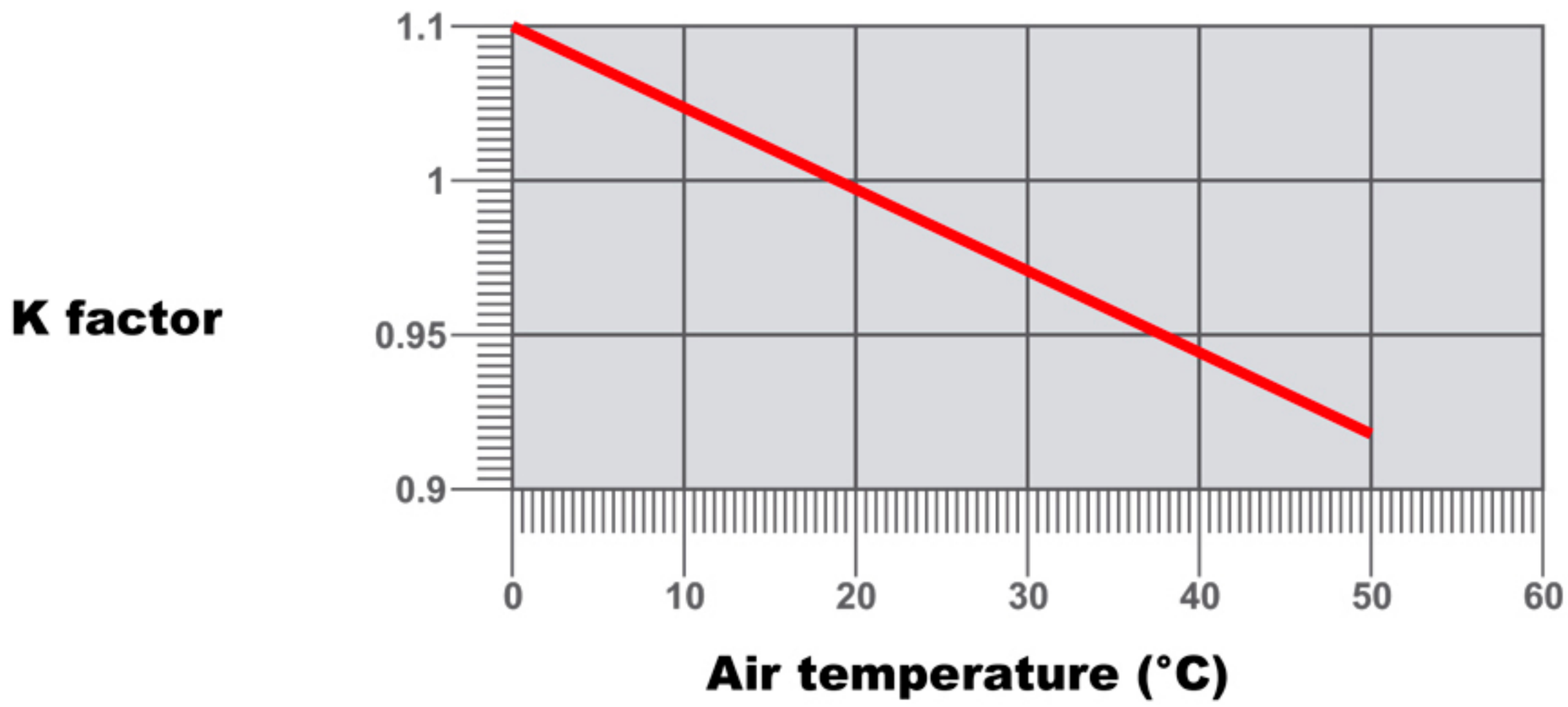

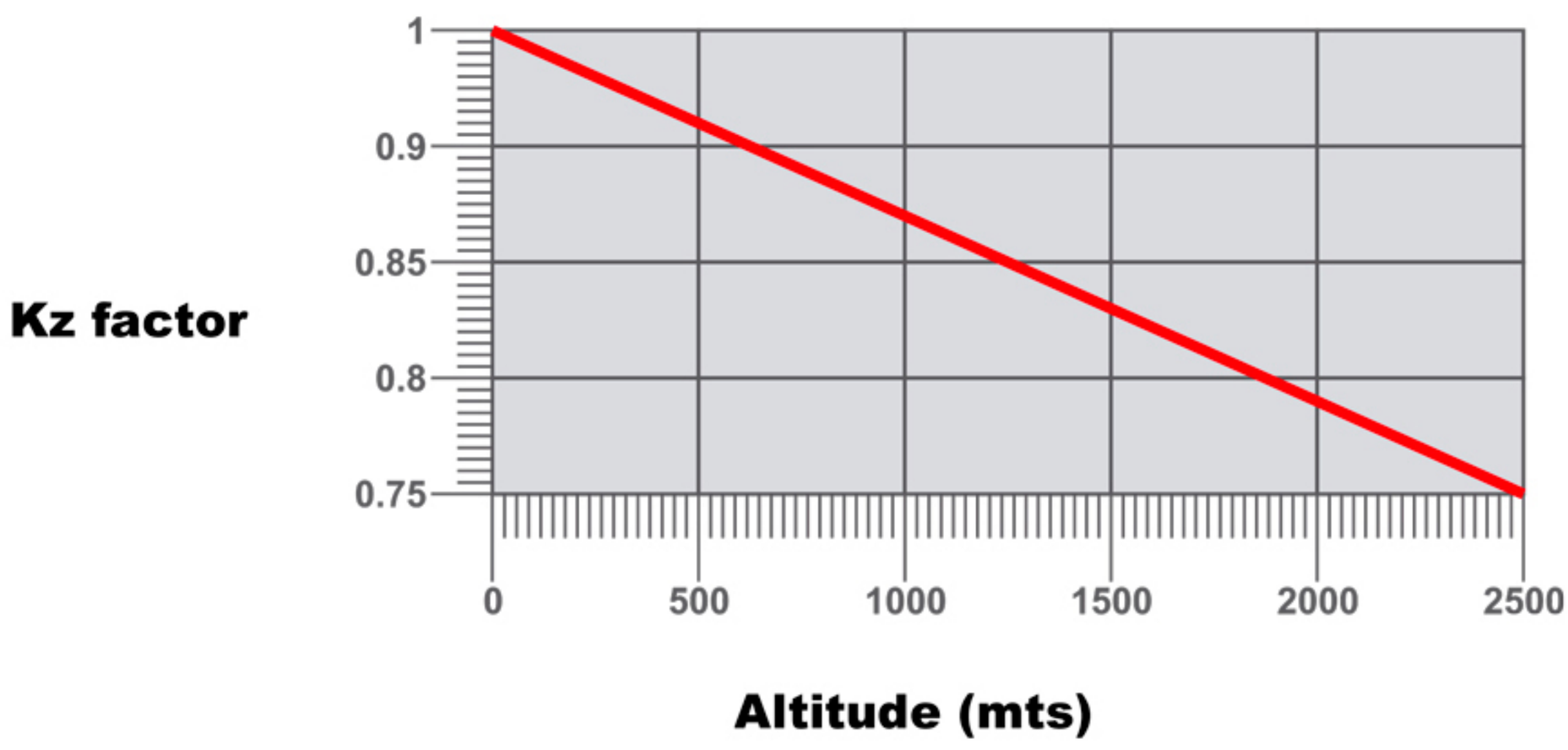

		Fiber type						Diffusion type					Mounting system			
		Full color	Benelux	Pyro-Glass	Green Line	Insul-duct	Aeroflex	Uniflow	Multiflow	Permaflow	Laserflow	Inerjet	Galv. cable	Stainless cab.	Rails	Hooks
Retail Industry	Air conditioning	Excellent	Excellent		Excellent			Excellent	Excellent	Excellent	Excellent	Very Good	Excellent		Excellent	Very Good
	Ventilation	Very Good	Very Good		Good				Excellent			Excellent	Excellent		Excellent	
	Clean air	Very Good	Very Good		Good				Excellent			Excellent	Excellent		Excellent	
	Heating				Good				Excellent			Excellent	Excellent		Excellent	
Exhibition centers	Air conditioning	Excellent	Excellent		Excellent	Excellent			Very Good	Good	Good	Excellent	Excellent		Excellent	
	Ventilation	Very Good	Very Good		Very Good				Very Good			Excellent	Excellent		Excellent	
	Clean air	Very Good	Very Good		Very Good				Very Good			Excellent	Excellent		Excellent	
	Heating			Excellent								Excellent	Excellent		Excellent	
Offices	Air conditioning	Excellent	Excellent		Excellent			Very Good		Excellent	Excellent		Very Good		Excellent	
	Ventilation	Very Good	Excellent			Excellent		Excellent	Excellent				Very Good		Excellent	
	Clean air	Very Good	Excellent					Very Good	Excellent			Very Good	Very Good		Excellent	
	Heating	Very Good	Excellent					Very Good	Excellent				Very Good		Excellent	
Call centers	Air conditioning	Excellent	Excellent					Excellent	Excellent	Good	Good	Excellent	Very Good	Very Good	Very Good	
	Ventilation	Very Good	Excellent				Excellent	Excellent	Very Good			Excellent	Very Good	Very Good	Very Good	
	Clean air	Very Good	Excellent					Excellent	Very Good			Excellent	Very Good	Very Good	Very Good	
	Heating	Very Good	Excellent					Very Good	Very Good			Excellent	Very Good	Very Good	Very Good	
Sport centers Pools	Air conditioning	Excellent	Excellent		Excellent			Excellent		Excellent	Excellent					
	Ventilation	Excellent	Excellent		Very Good		Excellent									
	Clean air	Excellent	Excellent		Very Good											
	Heating	Very Good	Very Good													
Food industry	Air conditioning	Excellent	Excellent		Excellent			Excellent		Excellent	Excellent			Excellent		
	Ventilation	Excellent	Excellent		Excellent				Excellent			Excellent		Excellent	Good	
	Clean air															
	Heating	Excellent	Very Good		Excellent				Excellent			Excellent		Excellent		
Electronic Industry	Air conditioning	Excellent	Excellent		Very Good	Excellent				Excellent	Excellent		Excellent			
	Ventilation	Very Good	Excellent	Excellent			Very Good		Excellent			Excellent	Excellent			
	Clean air			Excellent												
	Heating	Very Good	Excellent	Excellent									Excellent			
Automotive Industry	Air conditioning	Excellent	Excellent		Very Good			Excellent	Excellent	Excellent	Excellent		Excellent			
	Ventilation	Excellent	Excellent	Excellent		Excellent			Excellent			Excellent	Excellent			
	Clean air	Very Good	Excellent	Excellent				Very Good	Excellent			Excellent	Excellent			
	Heating	Very Good	Excellent	Excellent					Excellent				Excellent			
Pharmaceutical Industry	Air conditioning	Excellent	Very Good		Excellent			Excellent	Excellent	Excellent	Excellent			Excellent		
	Ventilation	Excellent	Very Good		Excellent			Very Good	Excellent	Very Good	Excellent			Excellent		
	Clean air	Excellent	Very Good		Excellent		Very Good	Very Good	Excellent	Very Good	Excellent			Excellent		
	Heating	Excellent	Very Good		Excellent			Very Good	Excellent	Very Good	Excellent			Excellent		
Greenhouses	Calefacción			Excellent			Excellent			Good	Good		Excellent			Good
Underground ventilation	Ventilation					Good	Excellent						Good			Good

Good Very Good Excellent

Suspension system selection
CABLE SYSTEM

6

Is the most popular, simple, affordable and adaptable system to match any diameter. It is mainly utilized in a circular shape duct; it could hold the pipeline in 1, 2 or 3 points depending on the result you seek to achieve and the size of the duct diameter. The system is composed with a 1/8 " cable, knots and turnbuckle.

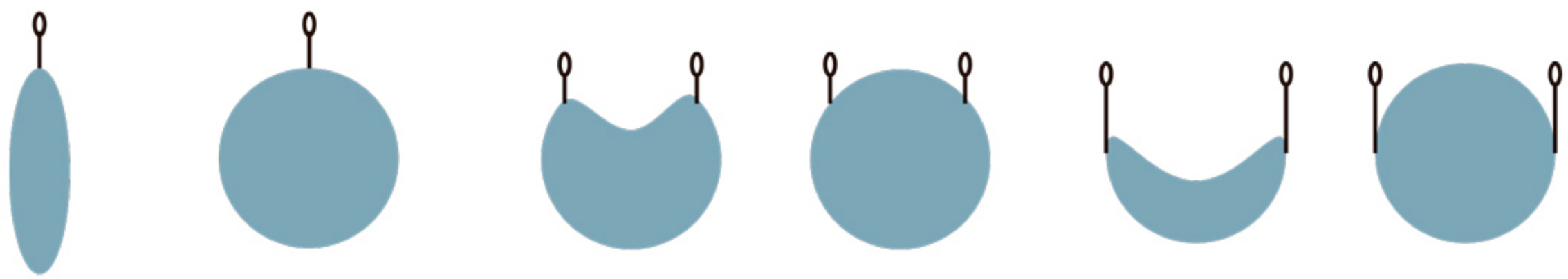

Simple Line 12h **Line 10-2h** **Line 9-3h**

Technical Characteristics

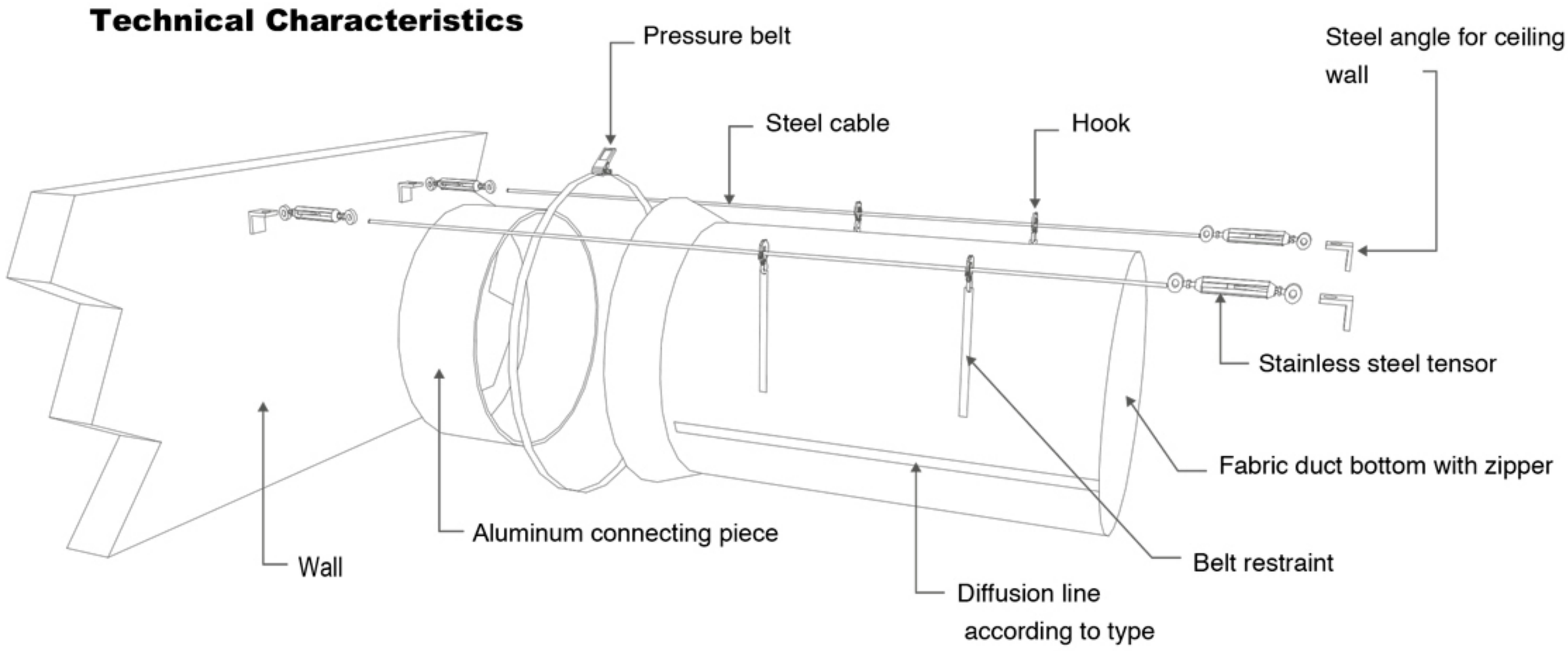

6 Suspension system selection

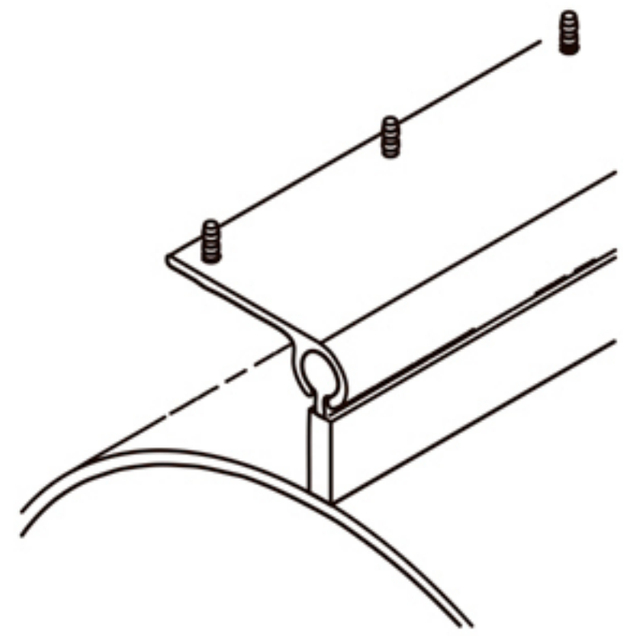

RAIL FLATHEAD SYSTEM

This system is mainly utilized on half round and quarter circle shape. Its main characteristic is that it could be placed parallel to the ceiling or surface where it's going to be installed.

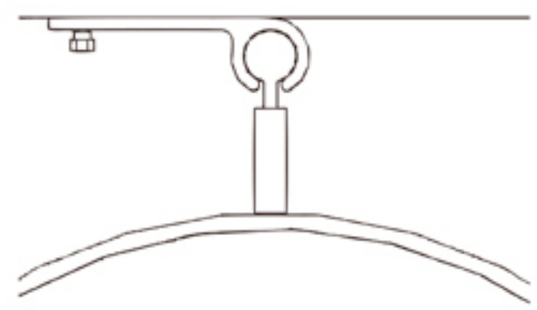

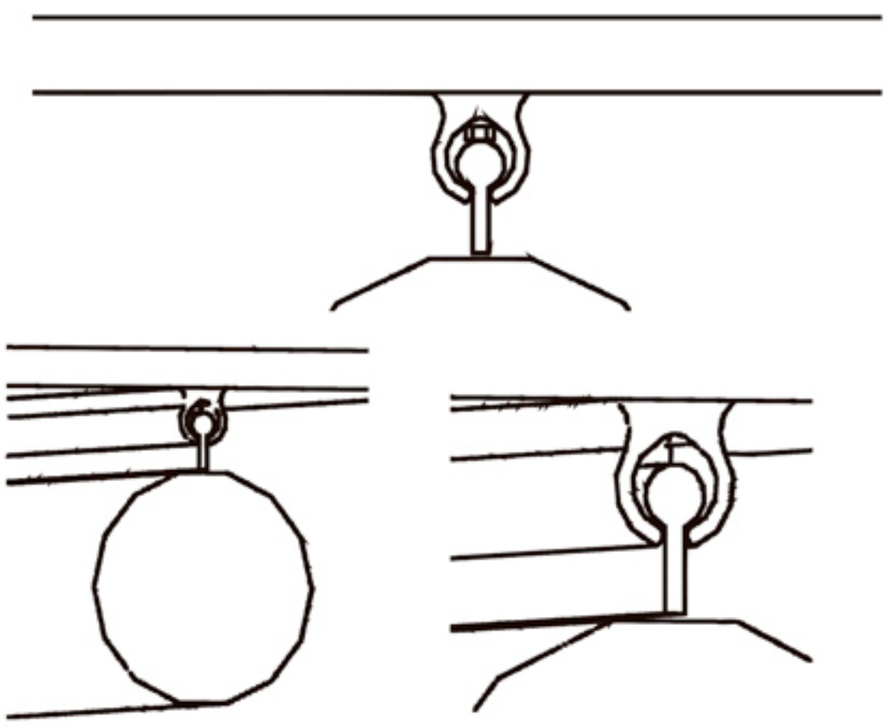

RAIL "C" SYSTEM

This system it's very similar to the flathead system, but its main characteristic is to be placed in the ceiling.

RAIL, ROUND SYSTEM

This is the most versatile system. It's used in scenarios where the duct will not be near the ceiling or wall.

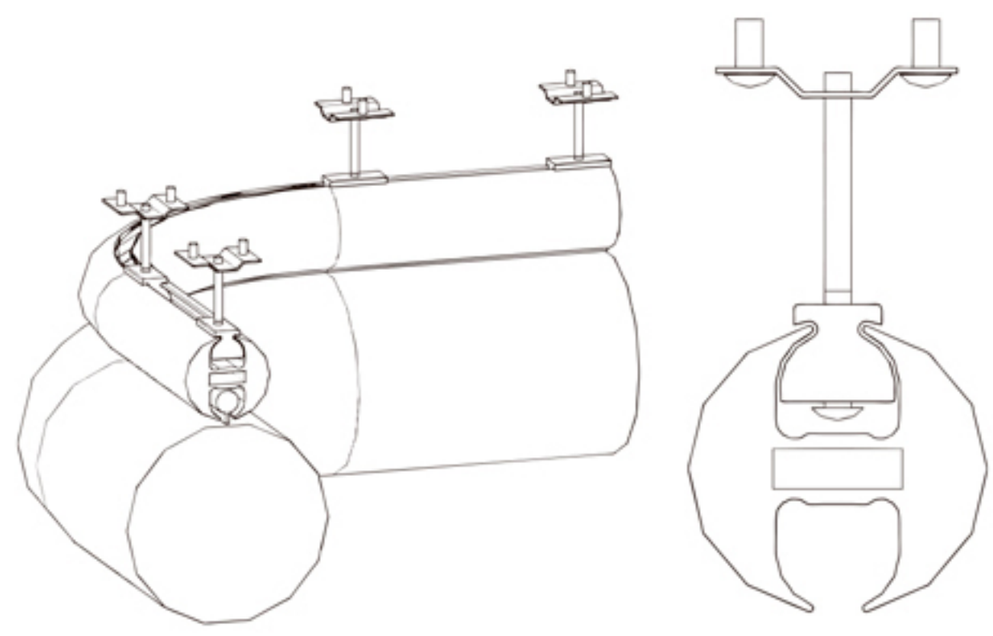
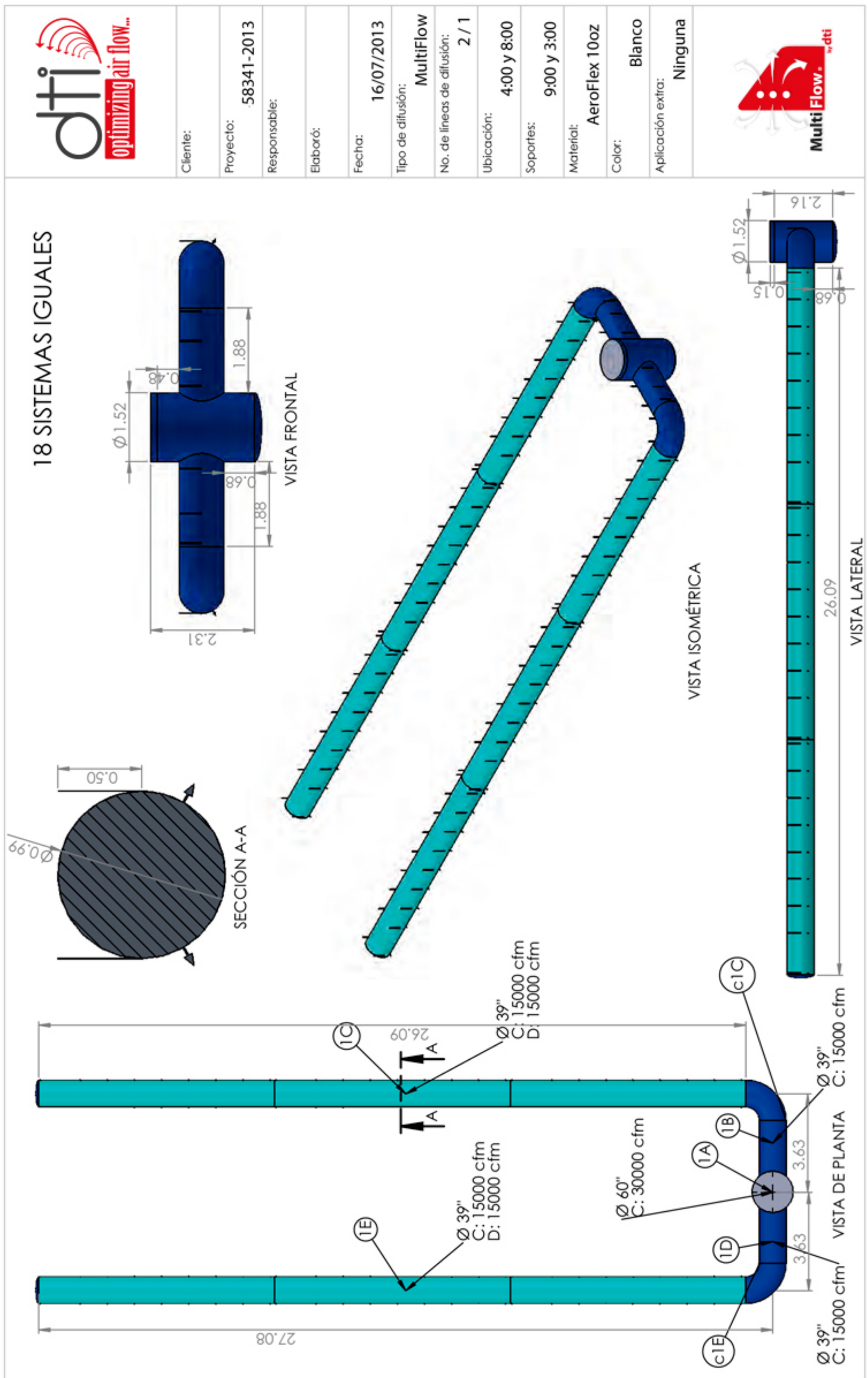
7 Fabric duct system graphical representation.